ORANGE
اورينج
SAFETY VISION



Our Range of Products are Listed With

UL LISTED · FM APPROVED · NFPA · LPCB · VdS

ORANGE SAFETY VISION TRADING L.L.C
ABU DHABI - U.A.E.

ORANGE VISION TRADING L.L.C
DUBAI - U.A.E.

ORANGE FIRE FIGHTING & SAFETY EQUIPMENT TR.
SHARJAH - U.A.E.

DESIGN | SUPPLY | FIRE PROTECTION | FIT OUTS | FACILITY MANAGEMENT | AMC CONTRACT

ABOUT US

ORANGE SAFETY VISION Established in the year 2011 based in UAE as an Fire Fighting & Safety Equipment Service & Trading Company at UAE, is leading by a team of dedicated professionals. We pleased to present our company services for Fire Protection System Installation and Maintenance, Electromechanical equipments Installation and Maintenance, Water Mist fire protection system installation and maintenance, Plumbing and special metal piping works, Hydraulic equipments Installation and Maintenance works for Oil & Gas Field Industry, Industries and Warehouses projects etc.

ORANGE SAFETY VISION has successfully managed to carved out a niche in the field of Electromechanical equipments Installation and Maintenance works across the UAE.

Our clients are includes in government, semi government and large private organizations such as ADNOC, TAKREER, GASCO, ETIHAD RAILWAYS Etc. in and around United Arab Emirates. Our installation and Maintenance works are carryout by our highly qualified professionals with no compromise to the quality and services. Our success and reputation are purely being built on highly effective, prompt and efficient service along with our qualified technical team, which we have invested in during our past years of experiences to remain as our big asset.



VISION

To become one of the top reliable Fire Fighting & Safety service providers in the Middle East within the shortest possible time through our capabilities in providing integrated solutions involving engineering skills. Our unique competency to provide economical solutions in the technically challenging areas with utmost customer satisfaction will enable us to achieve our vision.



MISSION

To provide exceptional services and solutions involving engineering skills such as specialized maintenance services, design services, resourcing service etc. Through courteous, affordable and outstanding quality.

COMPANY TIER

Our constant effort to provide complete Fire Protection, MEP, Fit Out and FM solutions is made possible by a three tier structure that caters to all types of customers from projects for Design Supply, Installation and Maintenance requirements. The structure is carefully designed to ensure that we are able to serve our customers with the required expertise and resources.



PROJECTS

This Division is responsible to deliver turn-key solutions to the building Industry through a network of design and project engineers.

This department will take care of all turnkey functions for new projects from design to Commissioning, for Residencial, Commercial, Industrial, Marine, Oil & Gas industry.



TRADING

The unit is responsible for global sourcing and supplying of all types of equipment and systems required by the industry. This will be supported with a demo showroom area that will display the most extensive range of products for MEP, FM, Fire Protection, Security, Design, Supply Installation & Maintenance for Residencial, Commercial, Industrial, Marine, Oil & Gas industry.



MAINTENANCE

The after sales response unit is to help our customer realize long term utilityof the systems we have supplied or installed. With a team of trained engineersand technicians, we ensure round the clock service to help you ensure highest level of Fire Protection, MEP and FM services to the people and properties. for Residencial, Commercial, Industrial, Marine, Oil & Gas industry.

OUR SERVICES

We develop special tailor-made solutions in collaboration with our customers. Thanks to our construction, which satisfy the highest demands in terms of quality, cost-effectiveness and Technology.

We have completed various projects in Abudhabi, Sharjah, Dubai, Ajman, Al Ain, Fujairah & RAK with highly qualified engineers and technicians trained to carry out projects on time and of the best quality, NITIE is one of the most reliable Fire Protection & Safety Systems Services Company in U.A.E.

We provide reliable solutions for projects of any size, technical and operational specifications or working conditions. We and our customers also have the benefit from our outstanding relationship with qualified business partners.

ORANGE SAFETY VISION Is Professional Maintenance & Trading Company Supply and Install approved products of Abudhabi & Northern Emirates Civil Defence Authorities Deals In Fire Alarm, Fire Fighting & Safety Products. We Are completed various projects for ADNOC, TAKREER, GASCO and other Oil & Gas companies in UAE.

ORANGE SAFETY VISION Is Responsible For Global Sourcing, Design Supply, Installation & Commissioning of Following Fire Protection Equipments And Systems Required By Industry Which Includes

Explosion Proof Fire Alarm & Flame Detection System
Wireless & Intelligent Fire Detection System
Stand Alone Smoke/ Heat Detectors
Addressable and Conventional Fire Alarm System
Fire Alarm Cable, Conduits & Its Accessories
Emergency Light Systems
Fire Extinguishers & Accessories
Pre Engineered FM-200 System
Fire Fighting Pump set & Accessories
Jet Spray Nozzles & Its Coupling
Sprinkler Systems
Water Mist fire Protection System
Clean Agent fire Suppression Systems
Kitchen Hood Fire Suppression Systems
Smoke Management Systems
Passive Fireprotection Systems
Telecommunication & CCTV Systems
Safety Shoes & Safety Jackets





Oil and Gas Field Services

Fire Protection System Installation and Maintenance for oil & gas field Industry.

- Annual Maintenance Contract of Fire Protection Systems for Oil & Gas field Industry (AMC)
- Fire Protection System Installation and Maintenance Oil & Gas field Industry.
- Supply of Fire Extinguishers, Foam System, Clean Agent System Etc..
- Supply of Generator, Generator Erection and Fuel handling Systems
- Supply of Petrochemical Materials
- Supply of Specialized Valves & Accessories for Oil & Gas Field Industries
- Pneumatic Instrumentation Piping and equipments

ORANGE SAFETY VISION Provide Exceptional Service And Solution Involving Engineering Skills With Professsional Engineer Team. We Provide Affordable Products With Best Quality.

QUALITY POLICY

ORANGE SAFETY VISION is always supply quality products and services that continuously meet the needs and expectations of its customers. On time delivery of products and services at the optimum cost, consistent monitoring, measuring and proving the level of customer satisfaction. We continuously upgrade the process and systems to be at par with international quality standards. Providing the appropriate and adequate training to all the employees to enhance their skills and contributions to meet the growing needs of the market, in order to consistently achieve these, Telltech is wholly committed to the implementation and maintenance of quality management system with the full cooperation and teamwork of all its employees. In striving for continual improvement, the quality management system and quality objectives will be periodically reviewed by the management to ensure their effectiveness and compliance with the requirements of international quality standards.



PROJECT MANAGEMENT AND EXECUTION STRATEGY

This is a systematic approach to organization evaluation and direction of design procurement and delivery process to achieve a completed project within cost time and quality requirements

- **Project Management Organization**
- **Key Alliance**
- **Resource Planning**
- **Design & Documentation**
- **Interface Management**
- **Procurement and Logistics**
- **Site Activity - Installation & Testing including**
- **Housekeeping**
- **Quality**
- **Testing & Commissioning**



ORGANIZATION

The quality of the resources of the Projects Management organization will determine the successful delivery of projects. Allocating a strong learn from the organization to manage projects. Majority of the team is having long term experience in UAE. Depth of experience across Design, Supply, Project Management and Procurement. Have experience with local and multinational environments. The Project Management office will be established at the site location.

- **Project management & contract administration**
- **Communication &direction**
- **Information release**
- **Budget & Program management**
- **Feedback & reporting**



DESIGN AND ENGINEERING

To establish client's design requirements while bringing complete control, Design Summary to control, manage and direct the designers responsible for design to ensure designers meet contractual obligations (Design output) and potential clash management with other services to ensure the design output meets the Client's requirements (Design Approvals) To control design cost & manage design schedule







MISSION STATEMENT

ORANGE SAFETY VISION strives to attain the greatest customer satisfaction by providing the best quality products and service possible. The highly skilled team of Managers, Workmen, Supervisor and Engineers are involved in installing the products as per client's individual requirements.
Our staff strives to meet and exceed customer's needs and our philosophy is to find solutions through innovation. We provide effective solutions that match functional capabilities of industrial requirements and are well conversant with safe industrial practice pertaining to human safety and material handling operations.

Our Vision to be the leader in the region through outstanding Fire Protection & Safety System services in our fields of operations.



OUR PRODUCTS

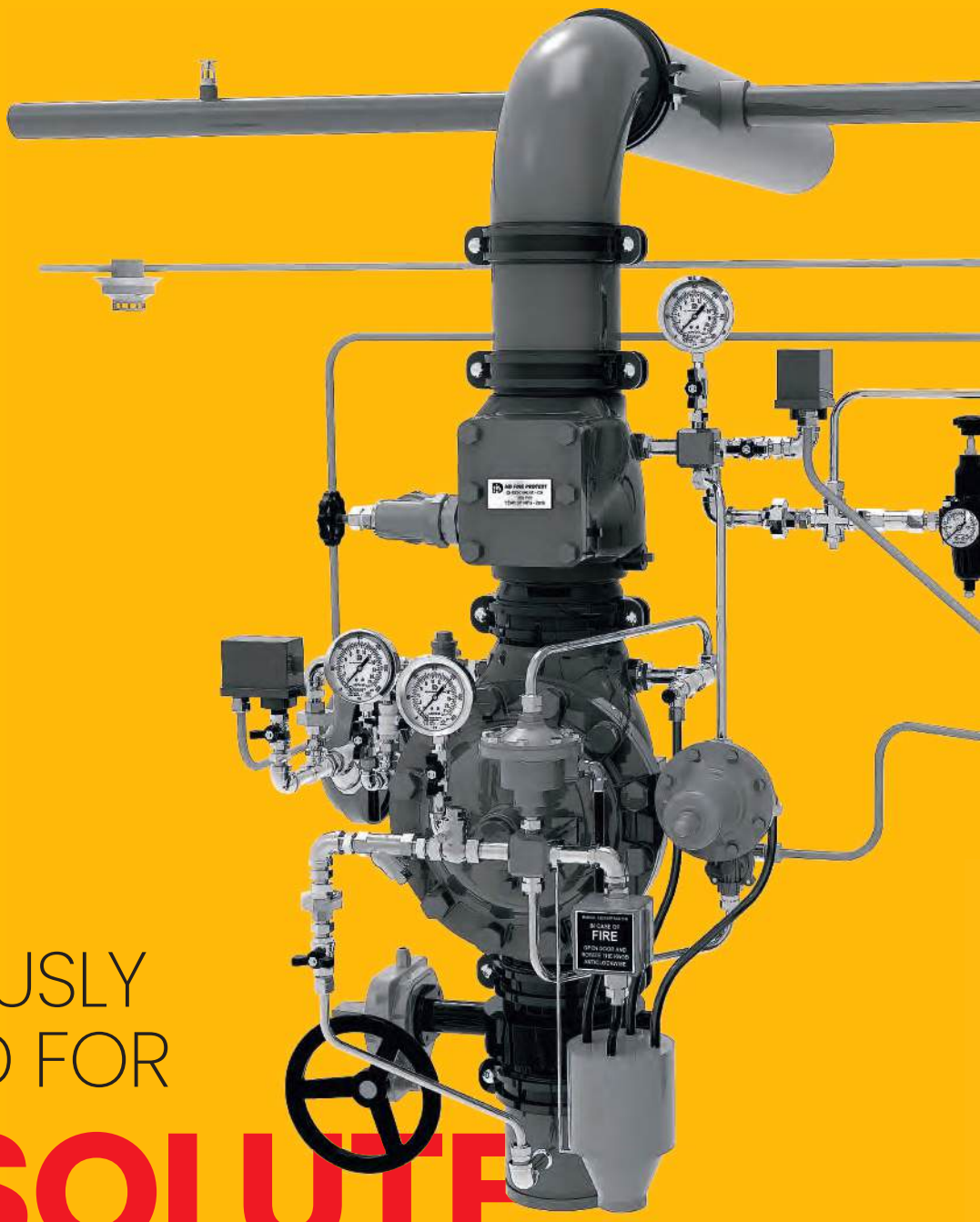

INGENIOUSLY
CRAFTED FOR

ABSOLUTE PROTECTION

HD FIRE PROTECT
Protecting what matters most to you

Deluge Valves

DELUGE VALVE MODEL A



- Size: 50, 80, 100, 150 & 200 mm (2", 3", 4", 6" & 8")
- Cast Iron construction
- Maximum service pressure 12kg/cm.sq (175 psi)
- Vertical inlet and Horizontal outlet
- Flanged connection dimensions to ANSI B 16.1
- Diaphragm operated with rubber to metal drip-tight positive sealing
- Reset without any tools
- Easily trimmed for actuation by manual, remote solenoid valve & with wet or dry pilot
- Internal and external surfaces epoxy coated for extra protection

DELUGE VALVE MODELS H2 & H3





- Size: 50, 80, 100, 150 & 200 mm (2", 3", 4", 6" & 8")
- H2: Cast Steel ASTM A216 WCB construction
- H3: Ductile Iron ASTM A536 construction
- Maximum service pressure 17.5 kg/cm.sq (250 psi)
- Horizontal or Vertical mounting
- Flanged (ANSI) or Grooved Type Connection
- Diaphragm operated with rubber to metal drip-tight positive sealing
- Auto-reset type
- Easily trimmed for actuation by manual, remote solenoid valve & with wet or dry pilot
- Internal and external surfaces epoxy coated for extra protection

DELUGE VALVE MODEL H5



- Size: 50, 80, 100, 150 & 200 mm (2", 3", 4", 6" & 8")
- Nickel Aluminium Bronze BS1400 Gr AB2 construction with suitable trim
- Maximum service pressure 17.5 kg/cm.sq (250 psi)
- Horizontal or Vertical mounting
- Flanged connection dimensions to ANSI B 16.5
- Auto-reset type
- Easily trimmed for actuation by manual, remote solenoid valve & with wet or dry pilot
- Complete trim is available in nickel aluminium bronze/monel material, suitable for sea water use



DELUGE SKID MODEL D-PACK

- D-PACK is a pre-assembled deluge valve skid package enclosed within a free-standing cabinet designed to occupy minimum floor space and also provide an aesthetically pleasing appearance
- Suitable for all HD deluge valve models
- Cabinet available in 14 gauge steel, SS304 or SS316 material
- RED finish
- The front door of the enclosure is fully hinged to maximize access to the enclosure
- All side panels are easily removable for maintenance
- Comes with downstream, upstream and by-pass butterfly valves
- All gauges externally visible through polycarbonate window
- Pressure switches, solenoid valve pre-wired and terminated into a junction box
- Completely pre-assembled and tested in factory
- Easy and fast installation
- UL Listed modular package







DELUGE SKID MODEL DSK

- Deluge Skid DSK is professionally pre-assembled deluge valve skid package
- Suitable for all HD deluge valve models
- Comes with downstream, upstream and by-pass butterfly valves
- Pressure switches, solenoid valve mounted, pre-wired and terminated into a junction box
- Can be custom designed and manufactured
- Cost effective
- Easy and fast installation
- UL Listed modular package

Water Spray Nozzles



MEDIUM VELOCITY WATER SPRAY NOZZLE (1/2")

- Size: 1/2" BSPT or NPT
- Open orifice design used in deluge water spray system
- Non-automatic fixed pattern, external deflector
- Solid cone discharge
- K-factor (Metric): 18, 22, 26, 30, 35, 41, 51, 64, 79, 91 & 102
- K-factor (US): 1.26, 1.54, 1.80, 2.10, 2.45, 2.87, 3.57, 4.48, 5.53, 6.37 & 7.14
- Spray angle: 65°, 80°, 90°, 100°, 110°, 120°, 140° & 160°
- Each Nozzle permanently marked with model number, batch number, spray angle, K-factor, UL & FM mark
- Approvals: UL Listed and FM Approved (All Models)

  Lloyd's Register Type approval for marine applications

  FM Approved Blow-Off Plug

MODEL MV-A & MV-AS

- Brass construction
- Finish - Brass or Nickel Chrome





MODEL MV-B & MV-BS

- Stainless Steel construction
- Finish - Natural



MODEL MV-E

- Aluminium Bronze construction
- Finish - Natural



REVERSE ACTION NOZZLE

- Model: MV-C (SS), MV-CB (Brass), MV-CE (Al Bronze) MV-CS (SS construction with SS strainer), MV-CBS (Brass construction with Copper Strainer)
- K-factor (Metric): 30, 51, 64, 79, 102 and 18 & 22 in MV-CS & MV-CBS
- K-factor (US) 2.1, 3.5, 4.35, 5.45, 6.75 and 1.3 & 1.5 in MV-CS & MV-CBS
- Spray angle: 120° & 140°
- UL Listed



HIGH VELOCITY WATER SPRAY NOZZLE (3/4")

- HV-AS in Brass material with Copper Strainer
- HV-BS in Stainless Steel material with Stainless Steel Strainer
- Non-automatic, open orifice, directional spray nozzle
- For high velocity water application for protection of flammable liquid and electric transformers
- K-factor: K-22 x 75°, K-18 x 80°, K-26 x 100°, K-32 x 90°, K-42 x 115° and K-23 x 120°
- Nozzle also available with blow-off cap
- Approvals: UL Listed and FM Approved



HIGH VELOCITY WATER SPRAY NOZZLE (1")



- HV-HB in Brass material with Copper Strainer
- HV-H in Stainless Steel material with Stainless Steel Strainer
- Non-automatic, open orifice, directional spray nozzle
- For high velocity water application for protection of flammable liquid and electric transformers
- K-factor: K-48 x 100°, K-58 x 100°, K-61 x 75°, K-78 x 90°
- Approvals: UL Listed

WINDOW / WATER CURTAIN NOZZLE MODEL CNS

- Size: 1/2" & 3/4" BSPT or NPT
- Non-automatic open orifice, fix pattern
- Used as curtain nozzle or window sprinkler
- UL Listed



REVOLVING NOZZLE



- Size: 65, 80 or 100 mm flanged (2.5", 3" or 4")
- Model: RH
- Bronze construction
- Working pressure 2.0 to 12.0 kg/cm.sq (30 to 175 psi)
- Flow 285 to 950 lpm (75 to 251 gpm) at 2 kg/cm.sq.
- Coverage: 10 metres in diameter at 2 kg/cm.sq (30 psi)

TANK COOLING NOZZLE MODEL TS/TSS

- Size: 1/2" & 3/4" BSPT or NPT
- Non-automatic open orifice, fix pattern
- Used for Tank cooling applications
- UL Listed





JUMBO CURTAIN NOZZLE

- Size: 65, 80 or 100 mm flanged end (2.5", 3" or 4")
- Stainless Steel construction
- Used to segregate the area by creating water curtain
- Flow 1000 to 3000 lpm (264 to 792 gpm) at 7 kg/cm.sq. (100 psi)
- Produces flat water curtain projecting upwards

System Equipment & Valves

BUTTERFLY VALVES

- Wafer, Lugged and Grooved Type Butterfly Valves with Tamper Switch
- Size: 2" to 12"
- Max. Working Pressure: 300 psi
- Body & Gear Box: Ductile Iron Construction (ASTM A536, 65-45-12)
- Disc: Ductile Iron with EPDM
- Drive Shaft: Stainless Steel
- Fusion Bonded Epoxy Coated
- UL Listed and FM Approved



GATE VALVES

- OS&Y and NRS resilient Wedge Gate valves
- Size: 2" to 24"
- Max. Working Pressure: 300 psi
- Body: Ductile Iron Construction (ASTM A536, 65-45-12)
- Disc: Ductile Iron with EPDM
- Stem: Stainless Steel
- Flanged end connections are available either in ANSI/AWWA or BS PN 16
- Fusion Bonded Epoxy Coated
- UL Listed and FM Approved



FLOW & PRESSURE SWITCHES

- Flow Switch
  - Size: 2" to 8"
  - Vane type water flow switch for use in wet sprinkler systems
  - Approvals: UL Listed & FM Approved
- High/Low Pressure Switch
  - Designed to detect pressure increase or decrease in fire protection systems
  - Explosion-proof model available
  - Approvals: UL Listed & FM Approved





SWING CHECK VALVES

- Flanged and Grooved Type
- Horizontal or Vertical Installation
- Size: 2" to 12"
- Max. Working Pressure: 300 psi
- Ductile Iron Construction (ASTM A536, 65-45-12)
- Fusion Bonded Epoxy Coated
- UL Listed and FM Approved



Y-TYPE STRAINERS

- Flanged and Grooved Type
- Size: 2" to 12"
- Max. Working Pressure: 300 psi
- Ductile Iron Construction (ASTM A536, 65-45-12)
- Fusion Bonded Epoxy Coated
- UL Listed



PRESSURE GAUGES

- Model HDP1 and HDP2
- Dial Size: 90 mm (HDP1) & 100 mm (HDP2)
- Range: 0 to 300 psi
- Polished Stainless Steel, weather proof case
- Bourdon Tube: Phosphorous Bronze (HDP1) & Monel (HDP2)
- Model HDP2 suitable for use with Sea Water
- UL Listed & FM Approved



MULTI-JET CONTROL (MJC) VALVE

- Size: Inlet of 40 mm with double outlet of either 32 or 25 mm
- Bronze construction
- Max. service pressure: 12 kg/cm.sq (175 psi)
- Temperature rating 57°C, 68°C, 79°C, 93°C
- End connection BSPT (NPT optional)



ZONE CONTROL VALVE ASSEMBLY

- Zone control manifold assembly incorporates a flow switch, test drain, system pressure gauge and pressure relief valve.
- Sizes: 2.5" to 8"
- Butterfly valve can be connected (optionally)
- Max working pressure: 175 psi



Sprinklers

PENDENT AND UPRIGHT SPRINKLER



- Standard and quick response with standard coverage
- Pendent or Upright mounting
- Temperature rating: 57°, 68°, 79° & 93°C
- K-factor 5.6 and 4.2
- Brass, Chrome or White / Custom colour finish
- Pendent sprinkler model available with 141°C & 182°C



CONCEALED SPRINKLER

- Standard and quick response
- Temperature rating:
  - 57°C & 68°C for Sprinkler bulb & 57°C for Cover Plate
  - 79°C & 93°C for Sprinkler bulb & 68°C for Cover Plate
- K-factor 5.6
- Brass Sprinkler with White or Chrome finish Cover Plate

RECESSED SPRINKLER



- Pendent or sidewall mounting
- Sprinkler comes with two-piece Recessed Escutcheon with recessed adjustment from the flush position
- Escutcheon plate in powder coated white finish or chrome finish

HORIZONTAL SIDEWALL SPRINKLER



- Standard and quick response with standard coverage
- Horizontal Sidewall mounting
- Temperature rating: 57°, 68°, 79° & 93°C
- K-factor 5.6
- Brass, Chrome or White / Custom colour finish

SPRINKLER GUARD



- Sprinkler guard comes in hard-wired cage design, chrome plated
- Used for encasing the sprinkler and protecting it from any inadvertent damages
- Suitable for pendent and upright mounted sprinklers

WINDOW SPRINKLER- VERTICAL SIDEWALL



- Standard and quick response with standard coverage
- Vertical Sidewall mounting
- Temperature rating: 57°, 68°, 79° & 93°C
- K-factor 5.6 and 4.2
- Brass, Chrome or White/ Custom colour finish

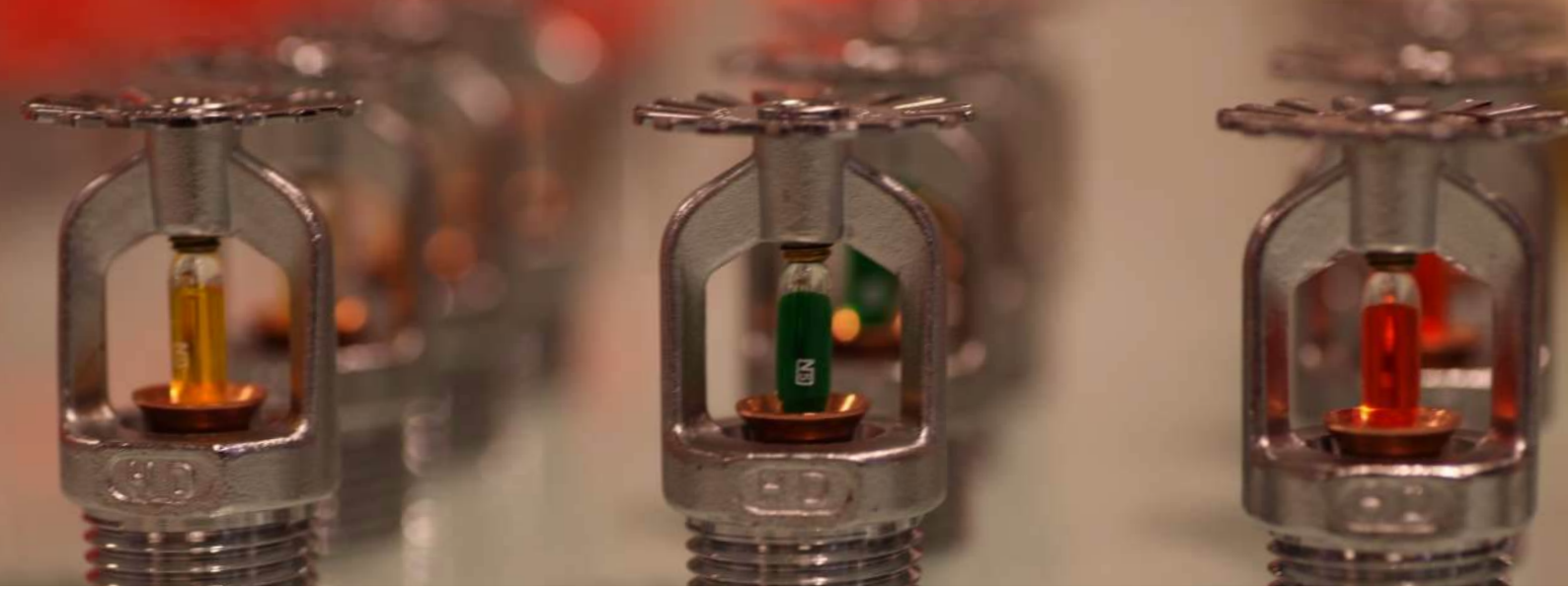

EXTENDED COVERAGE SPRINKLER

- Quick response with extended coverage
- Horizontal side-wall mounting
- Temperature rating: 57^0, 68^0, 79^0 and 93^0 C
- K-factor 5.6
- Brass, Chrome or White / Custom colour finish
- UL Listed



PENDENT, UPRIGHT AND SIDEWALL (K8)

- ¾" BSPT/NPT
- Standard and quick response with standard coverage
- Pendent or Upright mounting
- Temperature rating: 57^0, 68^0, 79^0 and 93^0 C
- K-factor 8
- UL Listed



SPRINKLER FLEXIBLE DROP

- Flexible Sprinkler Connections
- Braided & Unbraided
- Complete unit, a corrugated Stainless Steel flexible with nipple, reducer, Bar and brackets
- ½" or ¾" outlet
- Sizes: 700mm, 1000mm, 1200mm, 1500mm, 1800mm
- Max Service Pressure - 14 kg/cm.sq

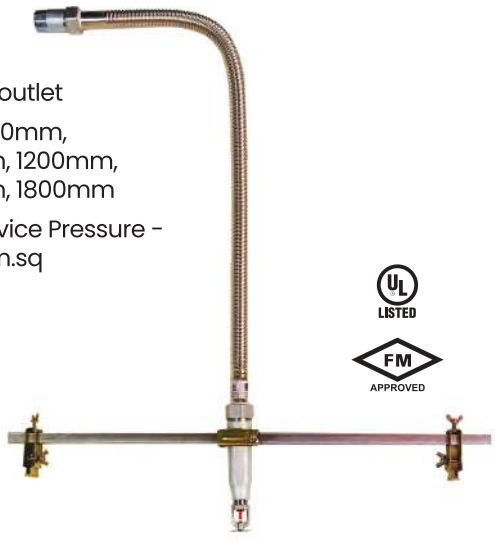

TEST AND DRAIN VALVES

- Size: 1", 1-¼", 1-½", 2"
- Screwed and Grooved type end connection
- Max. Working Pressure 300 psi
- K-factor 5.6 or 4.2 (optional)
- Brass construction (ASTM B584)
- Integral tamper resistant sight glass
- UL Listed & FM Approved



Alarm Valves

ALARM VALVE MODEL H

- Size: 80, 100, 150 & 200 mm (3", 4", 6" & 8")
- Ductile Iron ASTM A536 construction
- Maximum service pressure 17.5 kg/cm.sq (250 psi)
- Vertical mounting
- End Connection: Flanged x Flanged, Grooved x Grooved, Flanged x Grooved
- Variable Pressure Trim with Retard Chamber and Water Motor Gong
- Epoxy painted internally & externally
- For use in wet pipe (automatic sprinkler) fire protection system
- Automatically actuates electrically and/or hydraulically operated alarms during steady flow of water in sprinkler systems
- Approvals: UL Listed & FM Approved



WATER MOTOR GONG BELL MODEL GA

- Hydraulically operated mechanical bell used along with fire protection system valves
- Corrosion resistant Aluminium alloy material, epoxy coated all over
- Wall mounted (Type B) or direct online mounting type (Type A)
- Approvals: UL Listed and FM Approved



RETARD CHAMBER MODEL RC9

- Retard Chamber is used with Alarm Valve Trim when variable pressure is anticipated in the system. It is a holding tank to prevent sounding of Sprinkler Alarm during water pressure surge
- Stainless Steel material of construction
- Connection: 3/4" BSPT (F)



Pre-Action Systems



HD PREPACK PRE-ACTION SYSTEM

HD PrePack Pre-action system is perfect system to be used in applications where you need protection against inadvertent flooding due to sprinkler systems. Professionally pre-assembled cabinet with or without inbuilt oil-less compressor with control panel.

Trim Configurations:

- Single Interlock Pre-Action System with Supervised Wet Pilot Actuation
- Single Interlock Pre-Action System with Supervised Dry Pilot Actuation
- Single Interlock Pre-Action System with Supervised Electric Release
- Double Interlock Pre-Action System with Electric-Electric Actuation
- Double Interlock Pre-Action System with Electric-Pneumatic Actuation



Foam Proportioners

INLINE BALANCED PRESSURE PROPORTIONER



MODEL PS, PB, PMS, PBS

- Size: 65, 80, 100, 150 & 200 mm size (2.5", 3", 4", 6" & 8")
- Flow ranging from 270 to 18500 lpm
- Bronze or Stainless Steel material
- Duplex Pressure Gauge
- Working pressure 2.8 to 14 kg/cm.sq (40 to 200 psi)
- Flanged or Wafer Type Proportioner
- UL Listed

FOAM CONCENTRATE BY-PASS VALVE



MODEL BV & BVS

- Size: 40 & 50 mm (1.5" & 2")
- Bronze or Stainless Steel construction
- Female BSP end connection
- Suitable for use in Balanced Pressure Foam Proportioning System



INLINE FOAM INDUCTOR

- Size: 65, 80, 100 & 150 mm (2.5", 3", 4" & 6") size with fix flow of 75 to 3500 lpm
- Bronze or Stainless Steel construction
- Working pressure 6.4 to 12 kg/cm.sq (90 to 175 psi)
- Maximum back pressure as 65%
- Each unit is calibrated and factory tested for flow, induction rate at maximum back pressure



PORTABLE INLINE INDUCTOR

- Size: 2.5"
- Stainless Steel construction
- 225/450 lpm constant flow
- FM Approved



Foam Bladder Tank Proportioning System

- Capacity: 140 to 15,000 litres (36 to 4000 gal)
- Vertical or Horizontal unit
- Maximum working pressure 12 kg/cm.sq (175 psi)
- Carbon Steel or Stainless Steel Construction
  Tank made to latest revision of
  ASME Code Section VIII Div I
- Compatible with all foam concentrates
- Nylon reinforced Buna-n-rubber bladder
- Proportioner pre-piped on to the tank
- Bladder Tank filling kit (optional)
- ASME U Stamp / CE mark (optional)



RATIO CONTROLLER

- Size: 65, 80, 100, 150 & 200 mm (2.5", 3", 4", 6" & 8")
- Corrosion resistant Bronze or Stainless Steel construction
- Water type design as well as Flanged type available
- Flow from 100 to 17860 lpm
- Used with Bladder Tank or Inline Balance Pressure Proportioner for variable flow
- Service Pressure: 3 to 14 kg/cm.sq (44 to 200 psi)
- UL/FM approved with Foam Bladder Tank System



FOAM CONCENTRATE CONTROL VALVES MODELS CV & H

- Size: 25, 40 and 50 mm (1", 1½" & 2")
- Stainless Steel material
- Hydraulically controlled
- Working pressure 2.1-12 kg/cm.sq (50 to 175 psi)
- Suitable for Bladder tank and Inline balance pressure proportioning system
- Model CV is FM Approved with Foam Bladder Tank System



Foam Concentrates & Equipments

AFFF-C6
- HD AFFF is available as 1%, 3% and 6% concentrate

AR-AFFF-C6
- HD AR-AFFF is available in type 1 X 3%, 3 x 3% and 3 X 6% concentrate

FP-C6
- HD FP is available as 3% and 6% foam concentrate

FFFP
- HD FFFP is available as 3% foam concentrate

AFFF 3FZ-C6
- AFFF Foam concentrate suitable for storage and use at low temperature up to -18°C (0°F)



- Compatible with complete range of HD foam equipment
- Can be used with fresh water as well as seawater
- All Foam Concentrates available in freeze protected range
- Approvals: UL Listed & FM Approved

FOAM-WATER SPRINKLERS MODEL F1 & H

- Size: 1/2" BSPT / NPT
- Air aspirating type
- Stainless Steel (F1) or Bronze (H) construction
- Working pressure 2 to 4 kg/cm.sq (30 to 60 psi)
- K- Factor: 42
- Pendent mounting
- UL Listed & FM Approved



FOAM CONCENTRATE STORAGE TANK

- Capacity: 200 to 15000 liters (53 to 4000 gal.)
- Horizontal unit
- Stainless Steel 304/316 material
- Comes with ladder, sight glass and air vent
- Expansion dome of 2% tank capacity
- Flat end or dome end
- Natural, Custom or Red RAL 3000 epoxy painted
- Tank can be custom made with inline inductor mounted on the tank





FOAM CHAMBER MODEL FCA & FCA-S

- Size: 50, 65, 80, 100 and 150 NB (2", 2.5", 3", 4" and 6")inlet
- Flow from 150 to 3300 lpm (26 to 873 gpm)
- Carbon Steel or Stainless Steel material
- Working pressure 2.8 to 7 kg/cm.sq (40 to 100 psi)
- Epoxy painted
- Stainless Steel orifice plate fitted with foam chamber
- Frangible glass vapour seal
- Solid or split deflector
- UL Listed & FM Approved





RIM SEAL FOAM POURER MODEL RPA & RPA-S

- Size: 65 NB (2.5")
- Flow 50 to 550 lpm (13 to 146 gpm)
- Rim Seal Pourer is designed to discharge foam gently as it expands and slides down inside of the tank shell and directly in the rim seal area
- Carbon Steel or Stainless Steel Construction
- Epoxy painted
- UL Listed & FM Approved

FOAM MAKER MODEL FMA & FMA-S

- Size: 50 & 65 NB (2" & 2.5")
- Flow 75 to 550 lpm (20 to 146 gpm)
- Carbon Steel or Stainless Steel construction
- Working pressure 2.8 to 7 kg/cm.sq (40 to 100 psi)
- Epoxy painted
- Stainless Steel orifice plate fitted with foam maker
- UL Listed & FM Approved



FOAM BRANCH PIPE

- Hand held foam branch pipe for long range performance
- Size: 60 NB with 2.5" inlet
- Aluminium construction
- FM Approved



Monitors

MONITOR VAJRA 331

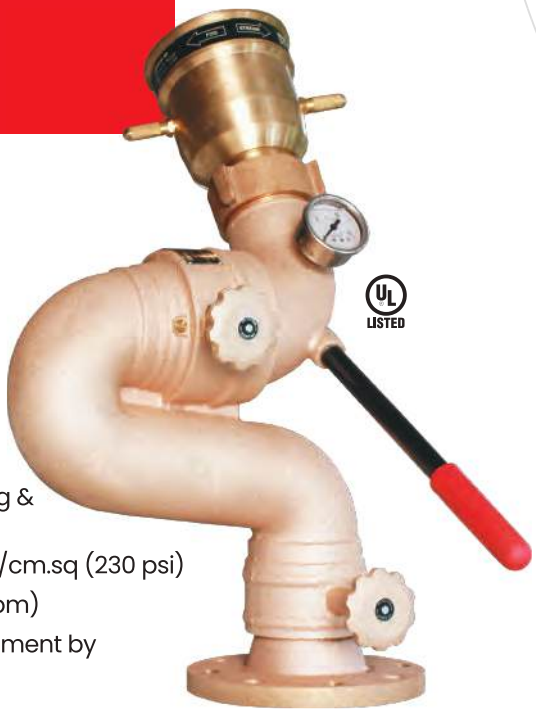

- Cast Bronze Construction
- 360° continuous horizontal rotation and +90° & -45° vertical elevation or optional +85° & 0°/-15°/ -30°vertical elevation
- Double Row of SS ball bearing & grease fittings
- Max operating pressure 16kg/cm.sq (230 psi)
- Flow up to 1000 gpm (3800 lpm)
- Vertical and horizontal movement by handle and manual lock
- UL Listed

MONITOR VAJRA 433



- Cast Bronze Construction
- Fully enclosed gear
- Double row of Stainless Steel ball bearing with grease fittings
- Maximum operating pressure 12 kg/cm.sq (175 psi)
- 115 mm waterway with 100 or 150 mm (4" or 6") flanged inlet and 4" BSP male threaded outlet
- 360° continuous horizontal rotation, +90°, -45° vertical elevation
- Red finish
- FM Approved



WATER POWERED OSCILLATING MONITOR VAJRA 331-S

- Cast Bronze Construction
- 0 to 120° Oscillating Angle, adjustable in 6 set points
- Water driven wheel drives the oscillating mechanism
- No external wiring or hydraulic control required
- Double row of SS ball bearing & grease fittings
- Max operating pressure 12 kg/cm.sq (175 psi)
- Flow up to 1000 gpm (3800 lpm)
- UL Listed



REMOTE CONTROLLED MONITOR VARUN443-ER

- Stainless Steel waterway
- 100 or 150 mm (4" or 6") flanged inlet with 4" BSP male threaded outlet
- Explosion proof motors for electric remote-control operation
- Supplied with explosion proof Control Panel
- Maximum operating pressure 12 bar (175 psi)
- Variable flow with nozzle model H4V (500/750/1000GPM)
- Monitor is available with or without jet ratio controller (JRC)
- UL Listed monitor Varun443







MONITOR M 341



- Size: 80 mm (3") waterway with flanged inlet of 80 or 100 mm (3" or 4") & outlet threaded to 3" BSP male
- Stainless Steel construction
- Easy deployment by one person
- Bronze swivel joint with double row of Stainless Steel ball bearing with grease fittings
- Maximum operating pressure 12 Bar (175 psi)
- FM Approved

MONITOR VARUN 443



- Size: 100 or 150 mm (4" or 6") flanged inlet with 4" BSP male threaded outlet
- Low profile design
- Stainless Steel waterway
- Fully enclosed worm gear for horizontal and vertical movement
- 360° continuous horizontal rotation and +90°, -65° vertical elevation
- Maximum operating pressure 12 kg/cm.sq (175 psi)
- Variable flow with nozzle model H4V (500 / 750 / 1000 gpm)
- Fixed flow with nozzle model H4 (500 / 750 / 1000 gpm)
- Approvals: UL Listed



MONITOR VARUN 643

- Size: 150 (6") flanged inlet and outlet
- Stainless Steel waterway
- Maximum operating pressure: 12 kg/cm.sq (175 psi)
- Variable/Fixed flow with nozzle model H6 (1000 / 1500 / 2000 gpm)
- Approvals: UL Listed





MONITOR M (ISI MARK)

- Size: 63 mm (2.5") with 1750 lpm at 7 kg/cm.sq
- Size: 80 mm (3") with 2580 lpm at 7 kg/cm.sq
- Size: 100 mm (4") with 3500 lpm at 7 kg/cm.sq
- Hot dip galvanized Carbon Steel waterway
- Maximum service pressure 12 kg/cm.sq (175 psi)
- Monitor with fixed flow solid bore nozzle
- ISI Marked

MONITOR M 311

- Size: 80 mm (3") waterway with flanged inlet of 80 or 100 mm (3" or 4") & outlet threaded to 3" BSP male
- Hot-dip galvanized Carbon Steel waterway
- Easy deployment by one person
- Bronze swivel joint with double row of Stainless Steel ball bearing with grease fittings
- Maximum operating pressure 12 kg/cm.sq (175 psi)
- FM Approved





MONITOR MG 413

- Size: 100 mm (4") with 100 or 150 mm (4" or 6") flanged inlet with 4" BSP male outlet
- Hot dip galvanized Carbon Steel 4" waterway and Bronze swivel joint
- Double row of Stainless Steel ball bearing with grease fittings
- Fully enclosed worm gear for horizontal and vertical movement
- Maximum operating pressure 12 kg/cm.sq (175 psi)
- Flow up to 4750 lpm (1250 gpm) friction loss less than 10 psi
- FM Approved



MONITOR VARUN 613

- Size: 150 mm (6") flanged inlet and outlet
- Low profile design
- Hot dip galvanized Carbon Steel waterway
- Bronze swivel joint with double row of Stainless Steel ball bearing
- Fully enclosed worm gear
- Maximum service pressure 12 kg/cm.sq (175 psi)
- 360° continuous horizontal rotation and +90°, -65° vertical elevation
- Single lifting hook
- Flow up to 12500 lpm (3300 gpm)
- FM Approved

Monitor Nozzles

MASTER STREAM MONITOR NOZZLES

- Fixed flow gallonage heavy duty nozzles for use with monitors
- Excellent water stream used as water nozzle or non-aspirating foam nozzle
- Easy pattern change under flow condition, from straight stream to wide fog
- Field replaceable spinning teeth ring
- Hard anodized Aluminium, Bronze or Stainless Steel material



MODEL VARSHA - 30

- Factory set for fixed flow between 1500 & 2850 lpm (400 & 750 gpm) at 100 psi (7.0 kg/sq.cm)
- 2.5" BSP swivel female inlet base



MODEL VARSHA - 40

- Factory set for fixed flow between1500 & 3030 lpm (400 & 800 gpm) at 100 psi (7.0 kg/sq.cm)
- 3" BSP Swivel female inlet base
- FM approved



MODEL VARSHA - 40U

- Factory set for fixed flow of 500, 750, 1000 gpm 100 psi (7.0 kg/sq.cm)
- 3" BSP Swivel female inlet base, 3" NH optional
- UL Listed with monitors VAJRA331 and VAJRA331-S



MODEL VARSHA - 50

- Factory set for fixed flow between 3030 & 7575 lpm (800 & 2000 gpm) at 100 psi (7.0 kg/sq.cm)
- 4" BSP swivel female inlet base
- FM approved



MODEL VARSHA - 60

- Factory set for fixed flow between 5680 & 12500 lpm (1500 & 3300 gpm) at 100 psi (7.0 kg/sq.cm)
- 150 mm (6") flanged inlet
- FM approved

HYDRO-FOAM MONITOR NOZZLES

- Self-inducting and non-aspirating water-foam monitor nozzles
- 3% or 6% foam induction rate
- Combination of fog and straight stream without shut off
- Spinning teeth ring for full fog pattern
- Provided with clear PVC 3 mtrs. long suction hose with one end Stainless Steel dip tube
- Hard anodized Aluminium, Bronze or Stainless Steel material



MODEL VARSHA - HF40U

- Factory set for fixed flow of 500 or 750 gpm 100 psi (7.0 kg/sq.cm)
- 3" BSP Swivel female inlet base, 3" NH optional
- UL Listed with monitors VAJRA331 and VAJRA331-S



MODEL VARSHA - H4 & H4V

- Fixed or Variable flow of 500, 750, 1000 gpm at 100 psi (7.0 kg/sq.cm)
- Stainless Steel Construction
- 4" BSP Swivel female inlet base
- UL Listed with monitor VARUN443



MODEL VARSHA - HF50

- Factory set for single fixed flow between 3030 & 4750 lpm (800 & 1250 gpm) at 100 psi (7.0 kg/sq.cm)
- 4.0" BSP swivel female inlet



MODEL VARSHA - HF60

- Factory set for single fixed flow between 4750 & 8500 lpm (1250 & 2245 gpm) at 100 psi (7.0 kg/sq.cm)
- 150 mm (6") flanged inlet

Mobile Equipment

MOBILE FOAM UNIT

- 160 litres capacity in Fiber Glass Foam Tank
- 120 to 220 litres capacity in Stainless Steel Foam Tank
- Two solid rubber wheels for easy maneuver by one person
- Mounted with Bronze or Stainless Steel foam inductor and Aluminium low expansion foam branch pipe
- Flow rate of 225/450 lpm (60/120 gpm) at 7 kg/cm2
- Provision of mounting two fire hoses
- Fire hoses and Foam concentrate supply (optional)
- FM Approved Inductor and Foam Branch pipe





HD-CHETAK

- Rugged 2 wheeled trailer with various capacity of storage tank
- Easy maneuvered by two persons or pulled behind light truck or jeep
- 80 or 100 mm (3" or 4") monitor mounted on tank
- Over run and manual brake
- Low profile design for safety and stability
- Trailer equipped with reflector
- Provision of manifold having 2.5" or 4" BSP coupling at rear side of trailer for water supply to monitor from hydrant network

TROLLEY MOUNTED MONITOR

- Easy maneuverability
- Trolley with two solid rubber wheels
- 63 or 75 (2.5" or 3") monitors can be mounted
- Water supply manifold with 2 or 4 inlet connections of 2.5" BSP instantaneous coupling
- Epoxy painted



HD Inert Gas Suppression System





HD-INERTSYS

Inert Gas fire suppression system

- Designed for:- IG55 (Argon and Nitrogen), IG541 (Nitrogen IG100, Argon IG01 and Carbon dioxide), IG100 (Nitrogen) and IG01 (Argon)
- Cylinder Sizes: 80 and 140 litre
- Operating Pressure: 200 bar (2900 psi), 300 bar (4351 psi), depending on volume and concentration requirements
- Releasing Device: Manual, Pneumatic, Electro-Magnetic
- Diffuser nozzles: Brass construction
- Approval: VdS
- System Design Calculations performed using VdS calculation software

HD IHP CO2 System



HD-RAKSHAK IHP CO2 SYSTEM

CO2 fire suppression system

- Cylinder Sizes: 2Kg to 18 Kg
- Operating Pressure: 60 bar
- Automatic IHP Valve in Brass construction
- Diffuser nozzles: Brass/SS construction
- Fire detection using heat-sensing tubing (UL Listed)
- The fire detection tube on charged condition automatically fills CO2 from the cylinder. This is a unique feature where one does not require additional Nitrogen cylinder to charge the detection tube



Custom Engineered Skids

DUAL BLADDER TANK SKIDS



- Vertical or Horizontal Dual units skid mounted
- First Bladder tank is the operating tank and the second one is standby/reserve
- Carbon Steel or Stainless Steel Construction
- Tanks made to ASME Code Section VIII Div I
- ASME U Stamp available as an option

BLADDER TANK WITH MULTIPLE PROPORTIONERS



- Vertical or Horizontal bladder tanks
- Multiple lines connected for multiple locations
- Depending on flow, multiple lines can be operational at one time

FOAM SKIDS



- Custom Engineered Foam skid as per project specific requirements
- Foam concentrate tank, Foam pump, proportioner and control panel are skid mounted
- Completely pre-assembled and tested in factory

CUSTOM ENGINEERED DELUGE SKIDS



- Custom engineered deluge skid is designed and manufactured as per specific project requirements
- Skid can be open frame or also enclosed with insulation and temperature control function
- Can be manufactured in suitable material for corrosive and harsh environments
- Completely assembled and tested in factory

DESIGN, SUPPLY, AMC CONTRACT OF | FIRE PROTECTION | CCTV | ACCESS CONTROL | SECURITY SYSTEMS

OUR GROUP OF COMPANIES

ORANGE SAFETY VISION TRADING L.L.C
ABU DHABI - U.A.E.

ORANGE VISION TRADING L.L.C
DUBAI - U.A.E.

ORANGE FIRE FIGHTING & SAFETY EQUIPMENT TR.
SHARJAH - U.A.E.

REAL PROJECTS INNOVATIVE TRADING L.L.C
ABU DHABI - U.A.E.

REAL PROJECTS GENERAL TRADING L.L.C
SHARJAH - U.A.E.

ORANGE
اورينج
SAFETY VISION

+971 6 5277444
+971 568 568 132
info@orangesafetyuae.com
www.orangesafetyuae.com

Office No 407, 4th Floor
Mohammed Al Mulla Tower
Al Ittihad Road, Al Nadha
Sharjah - U.A.E.